Temperature controller
1/16 DIN - 48 x 48
M3 line

Quick Guide • QG M3 - 1/11.09 • Cod. J30-478-1AM3 QG

ASCON TECNOLOGIC
via Indipendenza 56, 27029 - Vigevano (PV)
Tel.: +39 0381 698 71, Fax: +39 0381 698 730
internet site: www.ascontecnologic.com
E-mail: sales@ascontecnologic.com

Declaration of conformity and manual retrival

Class II instrument, rear panel mounting. This controller has been designed with compliance to the European Directives.
Consult Declaration of Conformity for further details on Directives and Standards used for Compliance. Declaration of Conformity can be found in the file **ASCON_DC_G2.zip**.
All information about the controller usage are inserted in the user manual (**ASCON_MIU_M3_EN.zip**).
The Declaration of Conformity and the manual of the controller can be downloaded (free of charge) from the web-site:

www.ascontecnologic.com

Once connected to the web-site, click on the **ascon** logo.
Select: **Download/Documentation**, and fill the table with:

- Typology: **Manual**; Type: **All**; Language: **All**; Code: **GAMMA2**

Click: **SEARCH** and

- Download the file: **ASCON_DC_G2.zip** (Declaration of Conformity of gamma2 controllers)
  ASCON_MIU_M3_EN.zip (M3 manual)

⚠ Warning!

- Whenever a failure or a malfunction of the device may cause dangerous situations for persons, things or animals, please remember that the plant must be equipped with additional devices which will guarantee safety.
- We warrant that the products will be free from defects in material and workmanship for 18 months from the date of delivery. Products and components that are subject to wear due to conditions of use, service life, and misuse are not covered by this warranty.

Description and dimensions

Depth: 120 mm

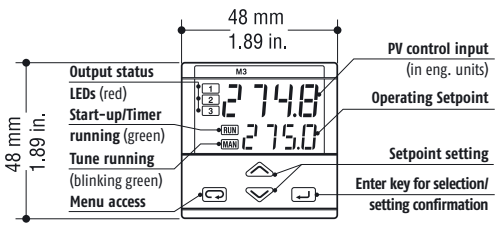

Panel cut out and mounting

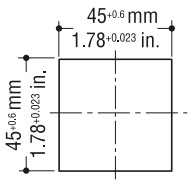

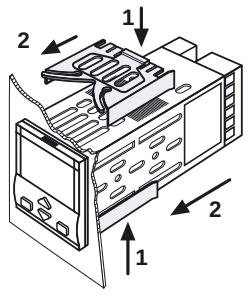

Electrical connections

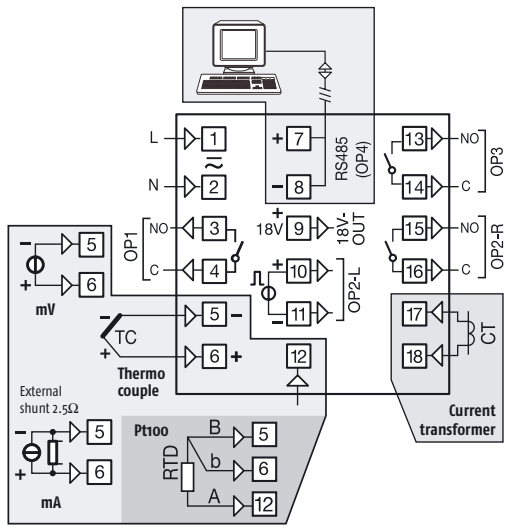

Terminals

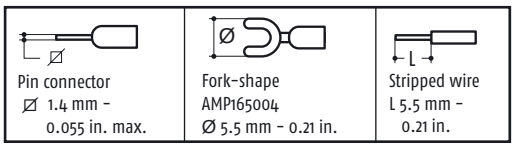

Model Code

The product code indicates the specific hardware configuration of the instrument, that can be modified by specialized engineers only.

Model: M3 | A B C D - E 9 0 0 / I L M N - O
(Line: M3; Basic: A B C D; Accessories: E 9 0 0; Configuration 1st part: I L M N; Configuration 2nd part: O)

Line	M	3

Power supply	A
100... 240Vac (-15... +10%)	3
24Vac (-25... +12%) o 24Vdc (-15.... +25%)	5

Outputs OP1 - OP3	B
Relay - Relay	1
Relay - Triac	2

Serial Comm.s	Options	C	D
Not fitted	None	0	0
	Current transformer input (CT)	0	3
	Transmitter Power Supply (P.S.)	0	6
	Transmitter P.S. + Retransmis.	0	7
	Transmitter P.S. + CT	0	8
	Transmitter P.S. + Retransmis. + CT	0	9
RS485 Modbus/Jbus SLAVE	None	5	0
	Transmitter Power Supply (P.S.)	5	6
	Transmitter P.S. + CT	5	8

Special functions	E
Not fitted	0
Start-up + Timer	2

Configuration Code

A 4 + 1 digits index code follows the model (letters from I... O).

This code must be set to configure the controller.
Using UP (⌃) and DOWN (⌄) keys insert the desired configuration code. When not configured the 1st part of the code is 9999.

Input type and range			I
TR Pt100 IEC751	-99.9...300.0°C	-99.9...572.0°F	0
TR Pt100 IEC751	-200...600°C	-328...1112°F	1
TC L Fe-Const DIN43710	0...600°C	32...1112°F	2
TCJ Fe-Cu45% Ni IEC584	0...600°C	32...1112°F	3
TC T Cu-CuNi	-200 ...400°C	-328...752°F	4
TC K Chromel-Alumel IEC584	0...1200°C	32...2192°F	5
TC S Pt10%Rh-Pt IEC584	0...1600°C	32...2912°F	6
Dc input 0...50mV linear	Engineering and units		7
Dc input 10...50mV linear	Engineering and units		8
Custom input and range [1]			9

[1] For instance, other thermocouples types, ΔT (with 2 PT100), custom linearisation etc..

Control mode	Output configuration	L
PID	Control OP1/alarm AL2 on OP2	0
	Control OP2/alarm AL2 on OP1	1
On-Off	Control OP1/alarm AL2 on OP2	2
	Control OP2/alarm AL2 on OP1	3
Heat/Cool action	Control OP1- OP3/alarm AL2 on OP2	6
	Control OP1- OP2/alarm AL2 on OP3	7
	Control OP2- OP3/alarm AL2 on OP1	8

Control action type		M
Reverse (single action)	Linear Cool (Heat/Cool double action)	0
Direct (single action)	ON-OFF Cool (Heat/Cool double action)	1

Alarms 2 and 3 type and function		N	O
Disabled (or, only for alarm AL3, used by Timer)		0	0
Sensor break/Loop break alarm (LBA)		1	1
Absolute	active high	2	2
	active low	3	3
Deviation	active high	4	4
	active low	5	5
Band	active out	6	6
	active in	7	7
Heater break by CT [2]	active during ON output state	8	8
	active during OFF output state	9	9

[2] This function can be set only when the CT option is installed.

Controller configuration chart

The present chart includes only the basic parameters
For the list and the description of all the controller parameters see the User Manual.
When the controller is new and not configured shows the code 9999 at power ON. In this case NO PASSWORD is needed to configure the instrument (see the grey box in the chart below). Enter the configuration code in accordance with the desired functional characteristics.

Warning! If the parameter CodE has previously set to a value ≥5000, (for example 5033 in the chart) the controller is locked in operator mode; insert the correct password to access both the parameter and the configuration menus.

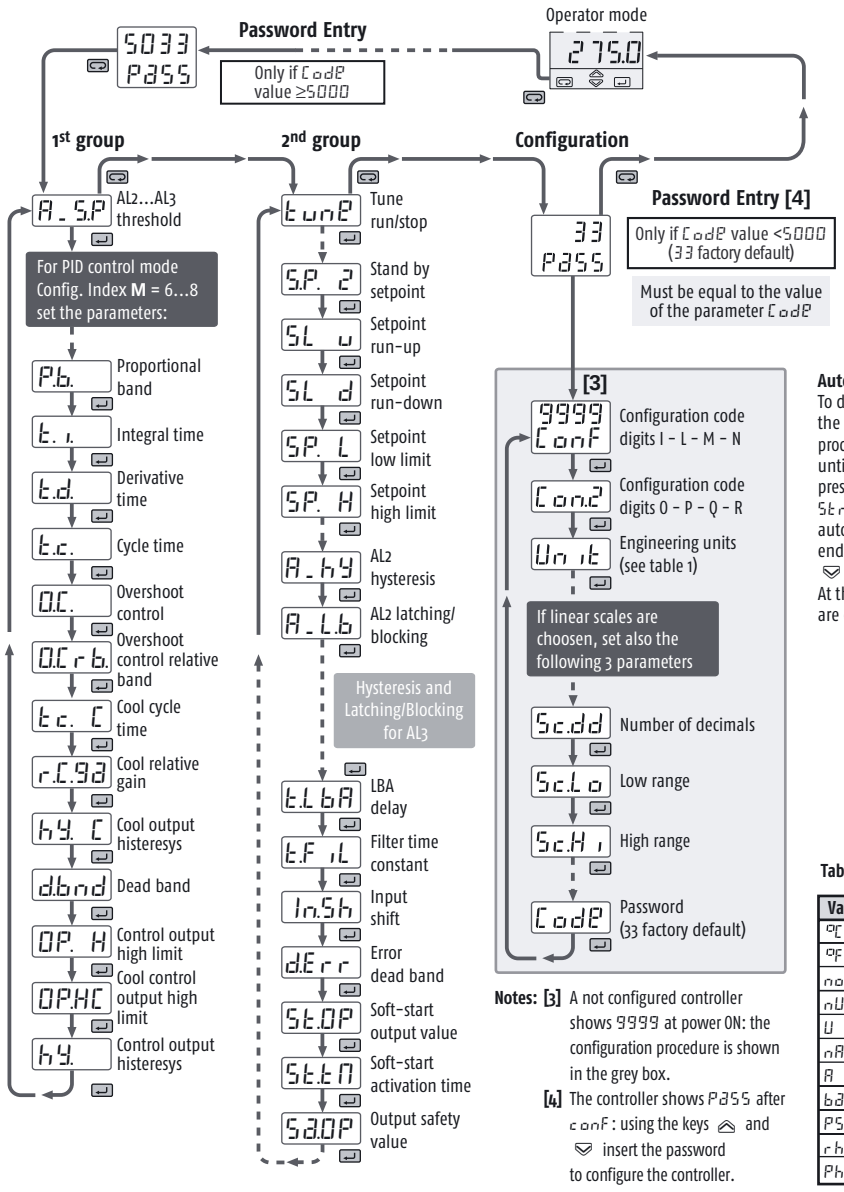

Automatic tuning
To determine the PID values for the process, run the tunE procedure: press the ⏎ key until the dislay shows: tunE; press the ⌃ ⌄ keys to select StrtE; then press ⏎ to run the automatic tuning procedure (to end the tuning procedure press ⌄ to select StoP then ⏎).
At the end the PID parameters are entered.

Notes: **[3]** A not configured controller shows 9999 at power ON: the configuration procedure is shown in the grey box.
[4] The controller shows PASS after conF: using the keys ⌃ and ⌄ insert the password to configure the controller.

Table 1 Engineering Units

Value	Description
°C	degree Celsius
°F	degree Fahrenheit
none	none
mV	mV
V	Volt
mA	mA
A	Ampére
bar	Bar
PSI	PSI
rh	Rh
Ph	pH

Parameter list

The parameters pointed out with grey background are those necessary to configure the options and are NOT shown in the configuration chart. All the parameters are fully described and explained in the user manual of the controller.

Code	Parameter Name	Value Default	Value User
ConF	1st Configuration code	9999	
Con.2	2nd Configuration code	0000	
Unit	Engineering units	NONE	
Sc.dd	Decimal point	0	
Sc.Lo	Low range for engineering units	0	
Sc.Hi	High range for engineering units	9999	
t.Mod	Timer/Start-up operating mode	OFF	
t.Act	Timer Action	OFF	
Prot	Communications protocol	JBUS	
baud	Baud rate	9600	
rEtr	Continuous Output range	4... 20	
rtH	Retransmitted signal selection	PV	
HtF.S	Current transformer range	OFF	
CodE	Password	33	
t.run	Timer run/stop	Stop	
A2SP	AL2 alarm threshold	0	
A3SP	AL3 alarm threshold	0	
P.b	Proportional band (Hysteresis ON - OFF)	5.0	
t.i.	Integral time	5.0	
t.d.	Derivative time	1.00	
t.c.	Output Cycle time	20	
O.C.	Overshoot Control	1.00	
O.C.rb.	Overshoot Control relative band	0.5	
tc.C	Cool cycle time	20	
rC.Ga	Relative Cooling Gain	1.0	
hy.C	Cool output Hysteresis (ON-OFF only)	0.5	
d.bnd	Heat/Cool Dead band	0.5	

Code	Parameter Name	Value Default	Value User
OP.H	Control output high limit	100.0	
OP.HC	Cool output maximum value	100.0	
hy.	Control output hysteresis (ON-OFF only)		
tunE	Start/Stop One shot tuning (0=Stop 1=Run)	STOP	
t.mE	Timer Setting	1	
SP.2	Stand-by Setpoint	0	
SL.u	Slope up	OFF	
SL.d	Slope down	OFF	
SP.L	Setpoint low limit	PV.LO	
SP.H	Setpoint high limit	PV.HI	
SP.SU	Start-Up Setpoint	0	
t.h.SU.	Start-Up Hold time	1	
OP.HS	Output high limit during Start-up	100.0	
A2hy	AL2 Alarm Hysteresis	0.5	
A2L.b	AL2 latching and blocking functions	NONE	
A3hy	AL3 Alarm Hysteresis	0.5	
A3L.b	AL3 latching and blocking functions	NONE	
t.LbA	Loop Break Alarm delay	OFF	
t.FiL	Input filter	2.0	
In.Sh	Input shift	OFF	
d.Err	Error Dead Band	OFF	
St.OP	Soft start output value	OFF	
St.tM	Soft-start activation time	1	
SA.OP	Output safety value	0.0	
Addr	Serial comm address	1	
rt.Lo	Retransmission low range	PV.LO	
rt.Hi	Retransmission high range	PV.HI	